MetrixSlide

Engineering Solutions 001: Custom Server Rail Development for an Existing 2U Server Chassis



Product reference only. This photograph is not a project-specific sample, delivered equipment or proof of completed testing.

> **Documented status: CAD-level compatibility direction accepted; sample PI issued.** Sample order confirmation and payment remain unverified. Sample manufacture, physical validation, production and delivery are not represented as completed.

Application and challenge

A server equipment manufacturer needed ball-bearing sliding rails for an existing 2U server chassis in a 19-inch rack. The rail had to work with the chassis-side mounting features and the rack mounting arrangement, rather than matching only a nominal U height or a catalog rail length.

The customer used a reference rail to explain the required function. The objective was a compatible mounting and service arrangement, with a MetrixSlide rail configuration developed around the actual interfaces.

Engineering approach

Review the minimum necessary interface information

The customer provided the mounting-area information needed for compatibility review. The complete confidential server CAD was not required for the initial engineering exchange. MetrixSlide reviewed the chassis-side attachment, front retention and rack-side mounting requirements together.

During the review, the teams identified a difference in the front mounting reference that could affect the chassis position in the intended rack space. The engineering work therefore addressed alignment as an assembly question, including the surrounding installation, rather than treating the difference as an isolated hole dimension.

MetrixSlide

Illustrative Model

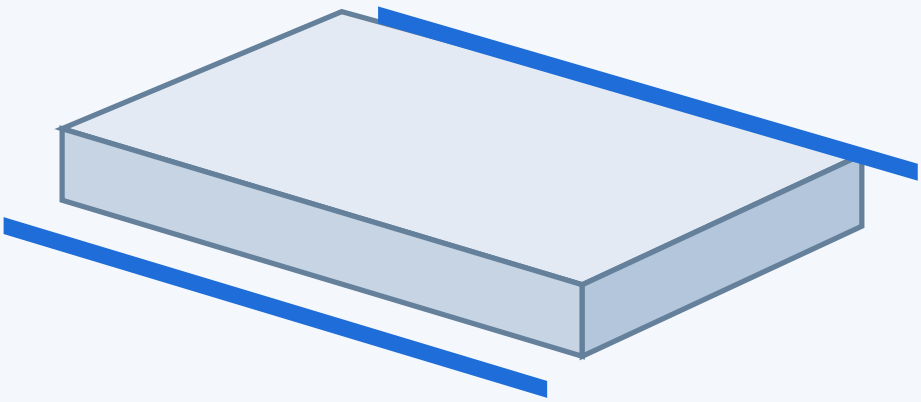

Generic illustration · not customer CAD · not to scale

Mounting details are reviewed privately for each project.

Illustrative Model — generic application context, not customer CAD, project geometry or a validated assembly.

Supply a customized rail model for assembly review

MetrixSlide developed and supplied customized 3D rail CAD. The customer integrated the model into its own server and rack assembly and reviewed the fit in that environment. After minor customer-side adjustments, the customer accepted the overall CAD-level compatibility direction.

The discussion also checked the rail bracket adjustment against the customer's rack-post spacing and coordinated the chassis-side attachment positions with the proposed rail configuration. These checks belong to this project; they do not establish a universal chassis or mounting standard.

Prepare the next validation stage

Technical documentation, installation guidance and a proforma invoice for samples were issued. The available record supports a transition toward sample-order discussions. It does not establish a paid or confirmed sample order, a completed sample build, or a production release.

Verified project progress

Stage	Supported by the project record	What remains separate
Requirements and interface review	Existing chassis and mounting needs reviewed	A dimension match alone does not establish fit
Customized rail CAD	Rail model supplied for customer assembly review	CAD is not a physical sample
Customer CAD integration	Overall compatibility direction accepted with minor adjustments	Physical fit and performance remain unverified
Sample planning	Technical guidance and sample PI issued	Order confirmation and payment are not evidenced

Stage	Supported by the project record	What remains separate
Physical and production stages	No completed milestone claimed	Sample build, installation, tests, design freeze and delivery require their own evidence

Current review: the engineering milestone remains CAD-level compatibility review. The sample order has not been established as confirmed or paid in the available record. Commercial discussions do not advance the technical validation status.

Customization capability

This project demonstrates interface review for an existing chassis, customized 3D rail development, customer assembly collaboration and rack-side adjustment review. It also shows how limited, relevant interface information can support an engineering discussion while the complete customer design stays private.

For another chassis, the sequence starts again with its own requirements: confirm the interfaces, review CAD, agree the sample configuration, then verify physical fit and the required performance. A prior project's CAD feedback does not prove another system compatible.

Customer confidentiality

Customer identity, original CAD, detailed mounting geometry, project-specific drawings and commercial terms are retained privately. The illustration here is generic. Product reference photographs are not presented as project-specific samples, shipments or test evidence.

Discuss an existing chassis project

Start with non-confidential chassis width, depth, U height, total loaded weight, mounting method and required service access. Relevant proprietary interface details can be shared after the review scope and confidentiality terms are agreed.

Request an interface review · Engineering confidentiality